# WLP1000/500-FDL
# TANK SPECIFICATIONS

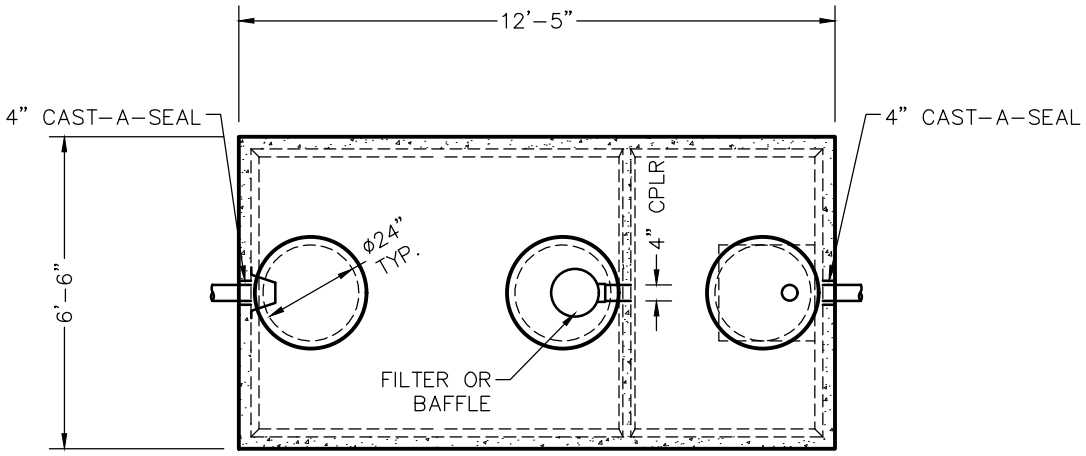


TOP VIEW

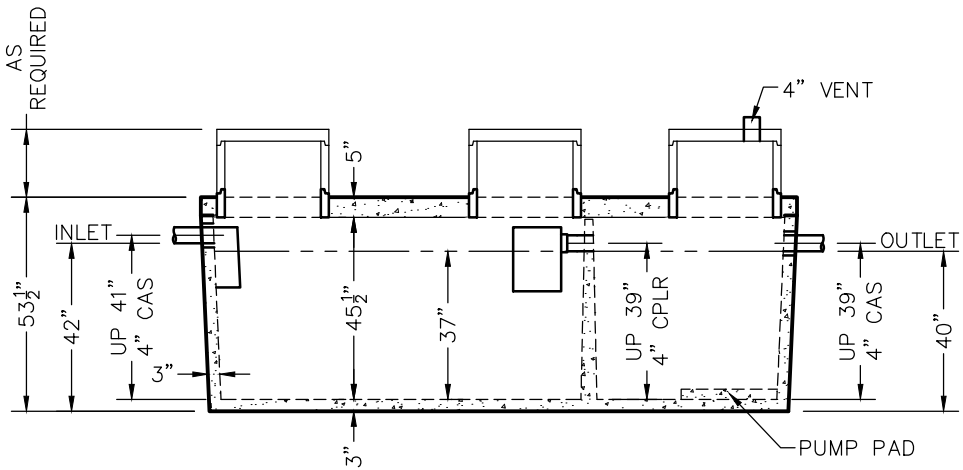


SIDE VIEW

DIMENSIONS:
- WALL: 3"
- BOTTOM: 3"
- COVER: 5"
- MANHOLE: 24" I.D. PRECAST CONCRETE RISER
- HEIGHT: 53 1/2" O.D.
- LENGTH: 12'-5" O.D.
- WIDTH: 6'-6" O.D.
- BELOW INLET: 42" O.D.
- LIQUID LEVEL: 37"
- WEIGHT: BOTTOM 9,960 LBS.
  COVER 5,040 LBS.

INLET AND OUTLET:
4" CAST-A-SEAL BOOT OR EQUAL GASKET

INLET AND OUTLET BAFFLE AND FILTER:
WISCONSIN, SEE DETAIL #10
(OTHER STATES SEE CHART)

LIQUID CAPACITY: 27.18 GAL/IN (SEPTIC)
13.67 GAL/IN (PUMP)

LOADING DESIGN: 8'-0" UNSATURATED SOIL

TANK CAN BE USED AS:
SEPTIC/SEPTIC, SEPTIC/PUMP
OR SEPTIC/SIPHON

COVER: MIX DESIGN #8 (NO FIBER)
TANK: MIX DESIGN #9 (SMALL FIBER)

CUSTOMIZED TANKS:
FOR CUSTOM TANKS CONTACT WIESER CONCRETE

REVIEWED BY _____
REVIEW DATE _____

**DRAWINGS SUBMITTED FOR APPROVAL**

APPROVED BY: _____
APPROVAL DATE: _____
PRODUCTS NEEDED BY: _____

TANKS ARE MANUFACTURED TO MEET OR EXCEED ASTM C-1227 REQUIREMENTS

PRE-POUR:
POST-POUR:
REV. | DATE:
SCALE: 1/4" = 1'-0"
DRAWN BY: WCP
DATE: 00/00/00
FILE: wlp1000-500 fdl


WIESER CONCRETE
W3716 US HWY 10, MAIDEN ROCK, WI 54750
800-325-8456


WLP1000-500 FDL
SEPTIC MANUAL

SHEET NO. 1 OF 1