W19000/19000
TANK SPECIFICATIONS

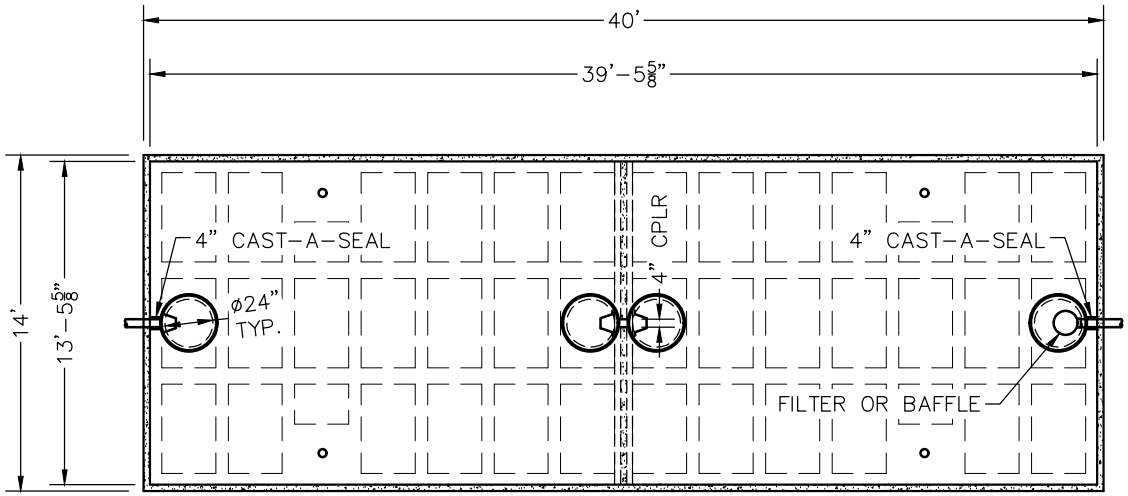

TOP VIEW

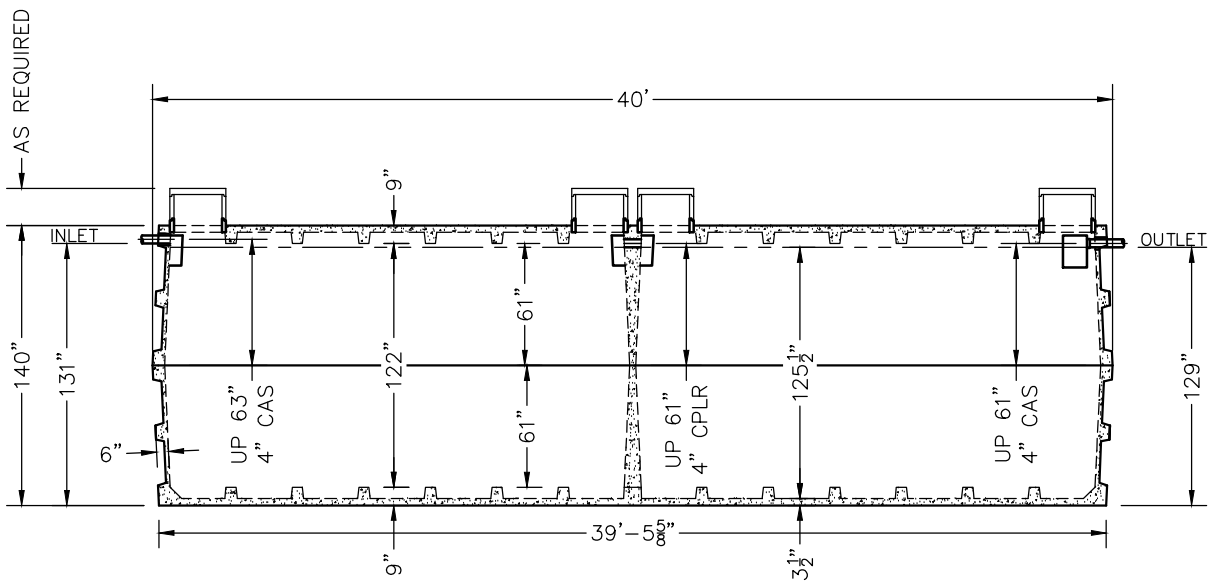

SIDE VIEW

DIMENSIONS:
- WALL: 6" RIBBED
- BOTTOM: 9" RIBBED
- COVER: 9" RIBBED
- MANHOLE: 24" I.D. PRECAST CONCRETE RISER
- HEIGHT: 140"
- LENGTH: 40'-0"
- WIDTH: 14'-0"
- BELOW INLET: 131"
- LIQUID LEVEL: 125 1/2"
- WEIGHT: 72,000 LBS. PER SECTION

INLET AND OUTLET:
4" CAST-A-SEAL BOOT OR EQUAL GASKET

INLET AND OUTLET BAFFLE AND FILTER:
WISCONSIN, SEE DETAIL #10
(OTHER STATES SEE CHART)

LIQUID CAPACITY: 150.80 GAL/IN (SEPTIC)
150.80 GAL/IN (PUMP)

LOADING DESIGN: 8'-0" UNSATURATED SOIL

TANK CAN BE USED AS:
SEPTIC/SEPTIC, SEPTIC/PUMP, OR SEPTIC/SIPHON

TANK: MIX DESIGN #9 (SMALL FIBER)

CUSTOMIZED TANKS:
FOR CUSTOM TANKS CONTACT WIESER CONCRETE

REVIEWED BY _____
REVIEW DATE _____

DRAWINGS SUBMITTED FOR APPROVAL
APPROVED BY: _____
APPROVAL DATE: _____
PRODUCTS NEEDED BY: _____

TANKS ARE MANUFACTURED TO MEET OR EXCEED ASTM C-1227 REQUIREMENTS

PRE-POUR:	POST-POUR:
DATE:	
REV.	
SCALE: 1/8" = 1'-0"	DRAWN BY: WCP
DATE: 00/00/00	FILE: w19000-19000

WIESER CONCRETE
W3716 US HWY 10, MAIDEN ROCK, WI 54750
800-325-8456

W19000-19000
SEPTIC MANUAL

SHEET NO. 1 OF 1