W1450/950-P TRIPLE TANK SPECIFICATIONS

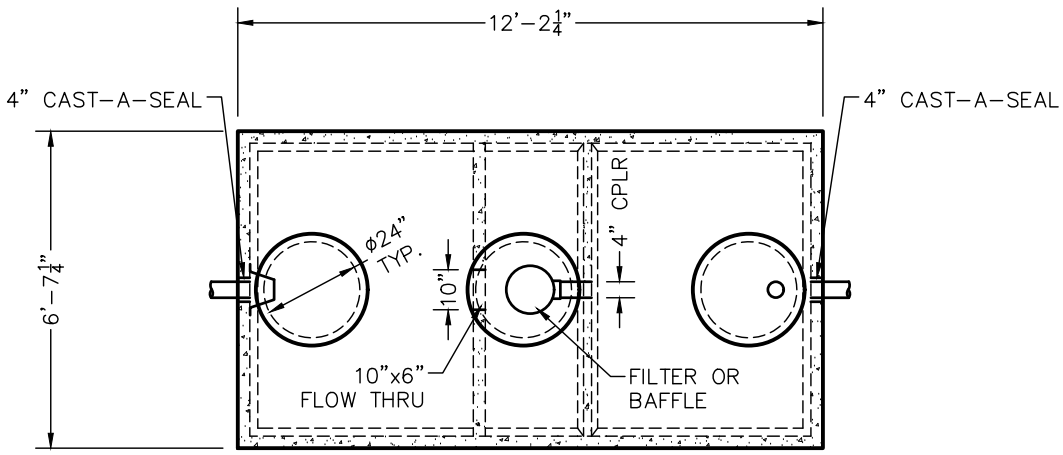

TOP VIEW

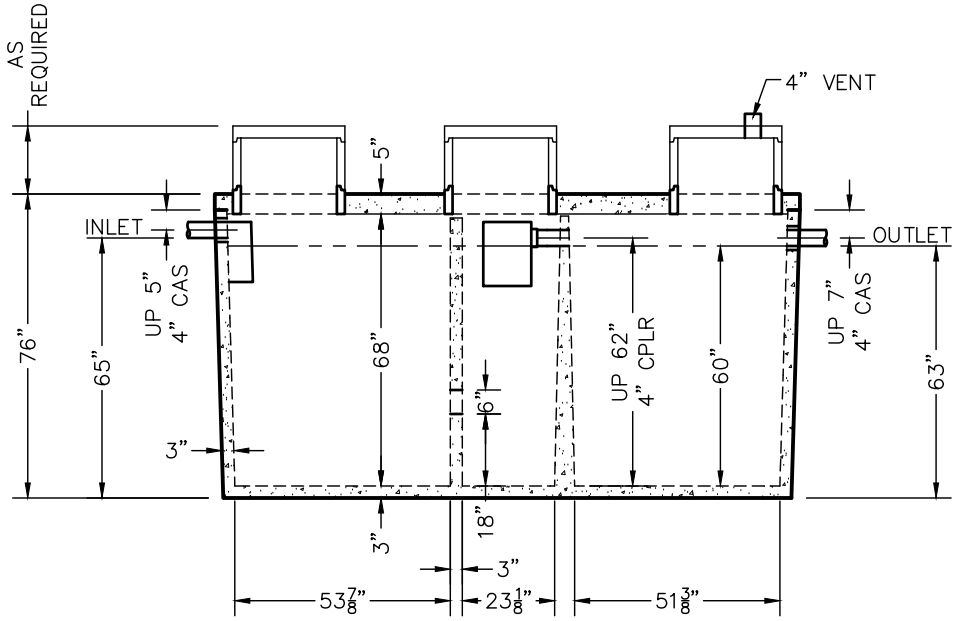

SIDE VIEW

DIMENSIONS:
- WALL: 3"
- BOTTOM: 3"
- COVER: 5"
- MANHOLE: 24" I.D. PRECAST CONCRETE RISER
- HEIGHT: 76" O.D.
- LENGTH: 12'-2 1/4" O.D.
- WIDTH: 6'-7 1/4" O.D.
- BELOW INLET: 65" O.D.
- LIQUID LEVEL: 60"
- WEIGHT: BOTTOM 16,300 LBS.
  COVER 5,035 LBS.

INLET AND OUTLET:
4" CAST-A-SEAL BOOT OR EQUAL GASKET

INLET AND OUTLET BAFFLE AND FILTER:
WISCONSIN, SEE DETAIL #10
(OTHER STATES SEE CHART)

LIQUID CAPACITY: 16.70 GAL/IN (SEPTIC)
7.28 GAL/IN (SEPTIC)
16.20 GAL/IN (PUMP)

LOADING DESIGN: 8'-0" UNSATURATED SOIL

TANK CAN BE USED AS:
SEPTIC/SEPTIC, SEPTIC/PUMP
OR SEPTIC/SIPHON

COVER: MIX DESIGN #8 (NO FIBER)
TANK: MIX DESIGN #9 (SMALL FIBER)

CUSTOMIZED TANKS:
FOR CUSTOM TANKS CONTACT WIESER CONCRETE

REVIEWED BY _____
REVIEW DATE _____

DRAWINGS SUBMITTED FOR APPROVAL
APPROVED BY: _____
APPROVAL DATE: _____
PRODUCTS NEEDED BY: _____

TANKS ARE MANUFACTURED TO MEET OR EXCEED ASTM C-1227 REQUIREMENTS

	PRE-POUR:	POST-POUR:
	DATE:	
	REV.	
SCALE: 1/4" = 1'-0"	DRAWN BY: WCP	DATE: 00/00/00

FILE: w1450-950 triple p

WIESER CONCRETE
W3716 US HWY 10, MAIDEN ROCK, WI 54750
800-325-8456

W1450-950 TRIPLE P
SEPTIC MANUAL

SHEET NO. 1 OF 1