W6010 BIO (2) 3000 GPD MICROFAST® 3.0 OR HIGH STRENGTH FAST® 3.0 TANK SPECIFICATIONS

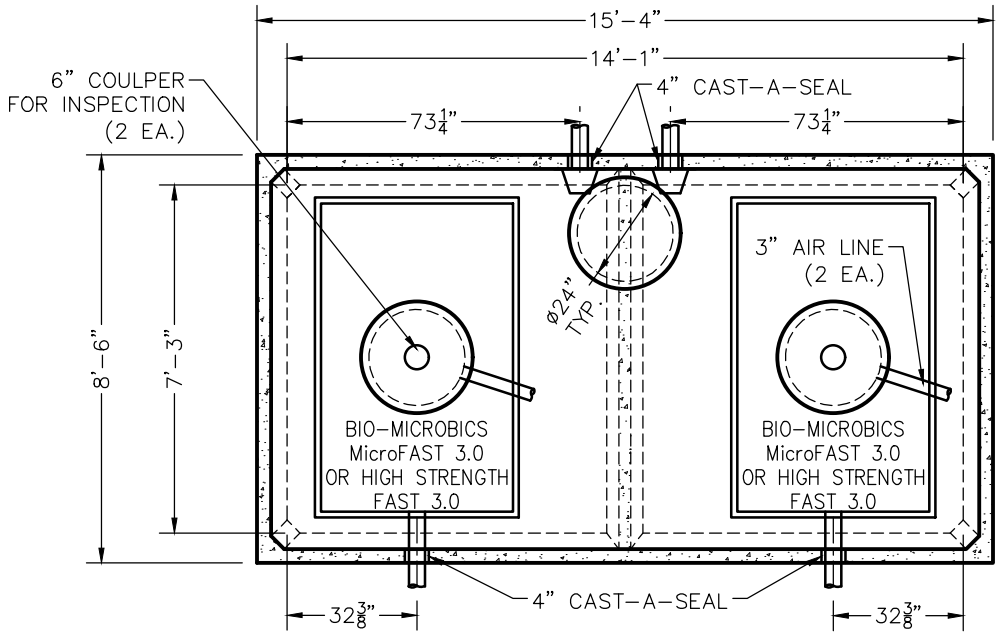

TOP VIEW

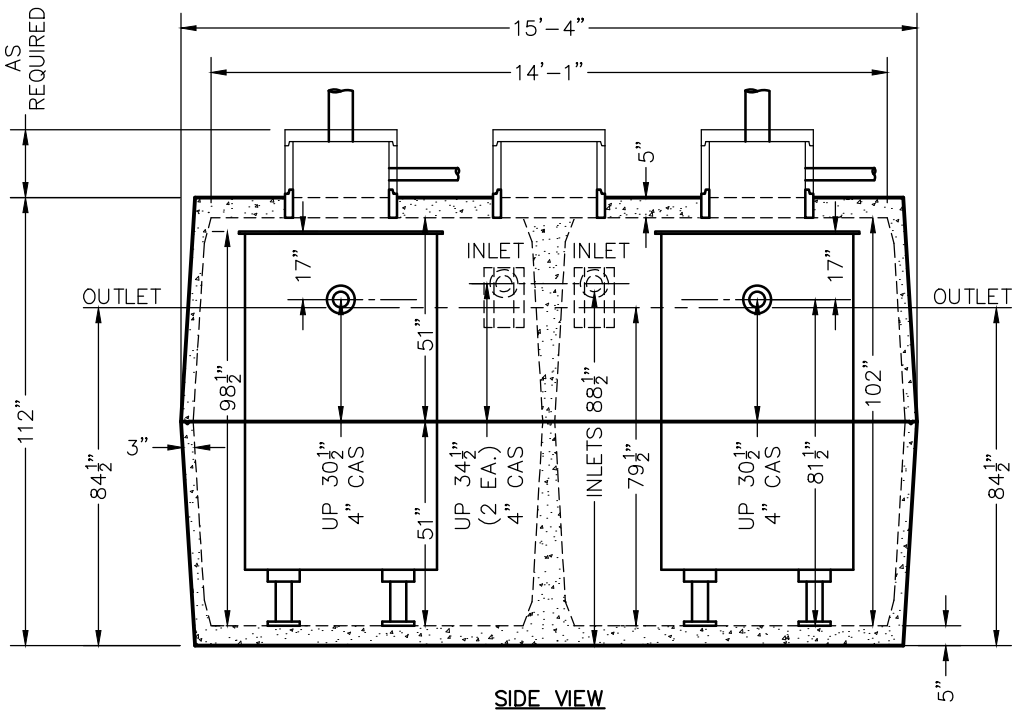

SIDE VIEW

DIMENSIONS:
- WALL: 3"
- BOTTOM: 5"
- COVER: 5"
- MANHOLE: 24" I.D. PRECAST CONCRETE RISER
- HEIGHT: 112" O.D.
- LENGTH: 15'-4" O.D.
- WIDTH: 8'-6" O.D.
- BELOW INLET: 88 1/2" O.D.
- LIQUID LEVEL: 79 1/2"
- WEIGHT: 15,050 LBS. PER SECTION

INLET AND OUTLET:
4" CAST-A-SEAL BOOT OR EQUAL GASKET

INLET AND OUTLET BAFFLE:
AS SHOWN

LIQUID CAPACITY: 70.71 GAL/IN

LOADING DESIGN: 8'-0" UNSATURATED SOIL

TANK: MIX DESIGN #9 (SMALL FIBER)

CUSTOMIZED TANKS:
FOR CUSTOM TANKS CONTACT WIESER CONCRETE

TANKS ARE MANUFACTURED TO MEET OR EXCEED ASTM C-1227 REQUIREMENTS

REVIEWED BY _____
REVIEW DATE _____

DRAWINGS SUBMITTED FOR APPROVAL
APPROVED BY: _____
APPROVAL DATE: _____
PRODUCTS NEEDED BY: _____

PRE-POUR:
POST-POUR:

SCALE: 1/4" = 1'-0" | REV. | DATE:
DRAWN BY: WCP
DATE: 00/00/00
FILE: w6010 bio hs fast (2) 3000

WIESER CONCRETE
W3716 US HWY 10, MAIDEN ROCK, WI 54750
800-325-8456

W6010 BIO HS FAST (2) 3000
SEPTIC MANUAL

SHEET NO. 1 OF 1