# W4200
## TANK SPECIFICATIONS

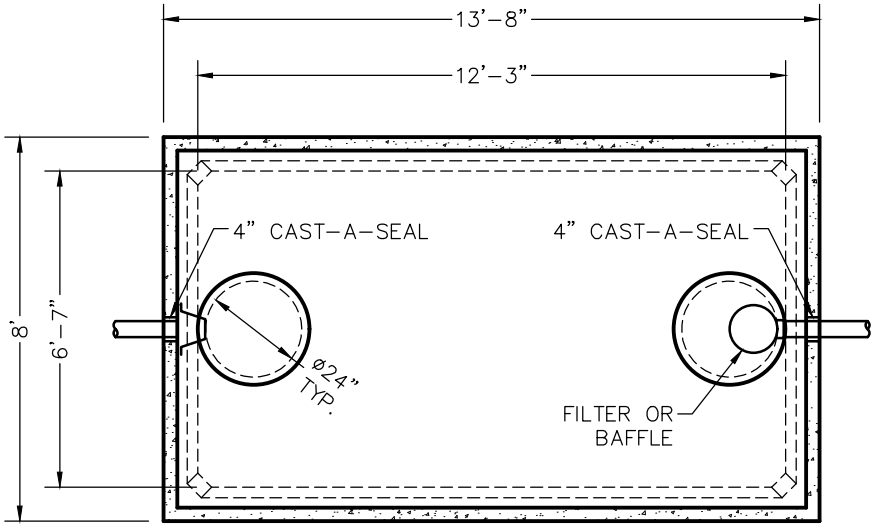


TOP VIEW

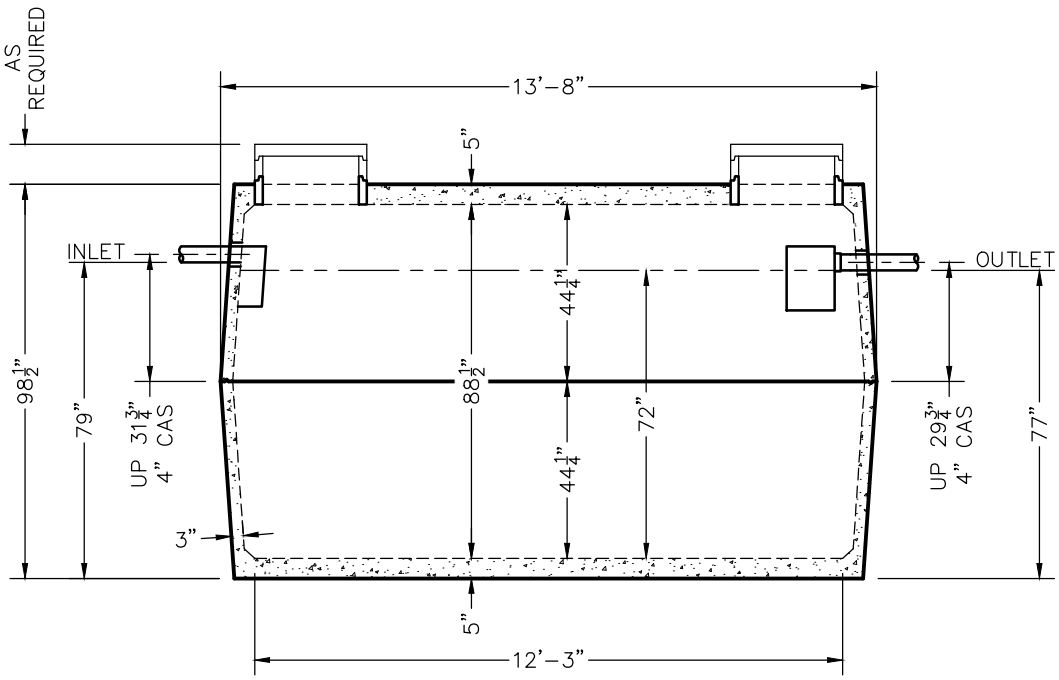


SIDE VIEW

DIMENSIONS:
- WALL: 3"
- BOTTOM: 5"
- COVER: 5"
- MANHOLE: 24" I.D. PRECAST CONCRETE RISER
- HEIGHT: 98 1/2"
- LENGTH: 13'-8"
- WIDTH: 8'-0"
- BELOW INLET: 79"
- LIQUID LEVEL: 72"
- WEIGHT: 13,200 LBS. PER SECTION

INLET AND OUTLET:
4" CAST-A-SEAL BOOT OR EQUAL GASKET

INLET AND OUTLET BAFFLE AND FILTER:
WISCONSIN, SEE DETAIL #10
(OTHER STATES SEE CHART)

LIQUID CAPACITY: 58.85 GAL/IN

HOLDING TANK:
OUTLET HOLE PLUGGED
ACTUAL CAPACITY: 4,355 GALLONS

LOADING DESIGN: 8'-0" UNSATURATED SOIL

TANK CAN BE USED AS:
SEPTIC / HOLDING / PUMP OR SIPHON

TANK: MIX DESIGN #9 (SMALL FIBER)

CUSTOMIZED TANKS:
FOR CUSTOM TANKS CONTACT WIESER CONCRETE

TANKS ARE MANUFACTURED TO MEET OR EXCEED ASTM C-1227 REQUIREMENTS

REVIEWED BY _____
REVIEW DATE _____

DRAWINGS SUBMITTED FOR APPROVAL
APPROVED BY: _____
APPROVAL DATE: _____
PRODUCTS NEEDED BY: _____

| PRE-POUR: | POST-POUR: |
|---|---|
| DATE: | |
| REV. | |
| SCALE: 1/4" = 1'-0" | DRAWN BY: WCP |
| DATE: 00/00/00 | FILE: w4200 |


WIESER CONCRETE
W3716 US HWY 10, MAIDEN ROCK, WI 54750
800-325-8456


W4200
SEPTIC MANUAL