WLP785–FDL
TANK SPECIFICATIONS

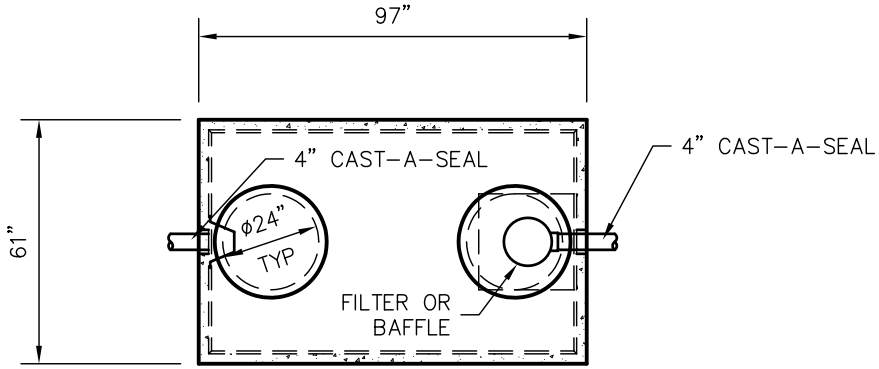

TOP VIEW

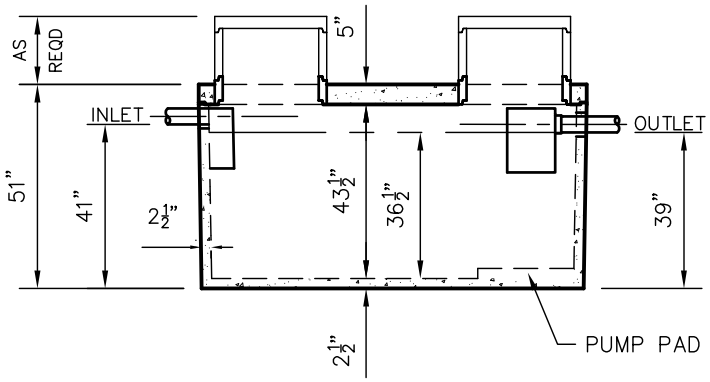

SIDE VIEW

DIMENSIONS:
- WALL: 2–1/2"
- BOTTOM: 2–1/2"
- COVER: 5"
- MANHOLE: 24" I.D. PRECAST CONCRETE RISER
- HEIGHT: 51" O.D.
- LENGTH: 97" O.D.
- WIDTH: 61" O.D.
- BELOW INLET: 41" O.D.
- LIQUID LEVEL: 36–1/2"
- WEIGHT: 7,000 LBS.

INLET AND OUTLET:
4" CAST–A–SEAL BOOT OR EQUAL

INLET AND OUTLET BAFFLE AND FILTER:
SEE DETAIL #10

LIQUID CAPACITY: 21.50 GAL/IN

HOLDING TANK:
OUTLET HOLE PLUGGED
ACTUAL CAPACITY: 828 GALLONS

LOADING DESIGN: 8' 0" UNSATURATED SOIL

TANK CAN BE USED AS:
SEPTIC/ HOLDING/ PUMP OR SIPHON

COVER: MIX DESIGN #8 (NO FIBER)
TANK: MIX DESIGN #9 (SMALL FIBER)

CUSTOMIZED TANKS:
FOR CUSTOM TANKS CONTACT WIESER CONCRETE

TANKS ARE MANUFACTURED TO MEET OR EXCEED ASTM C–1227 REQUIREMENTS

DRAWINGS SUBMITTED FOR APPROVAL

APPROVED BY: _____

APPROVAL DATE: _____

PRODUCTS NEEDED BY: _____

PRE–POUR:
POST–POUR:
SCALE: 1/4"=1'–0"
REV.
DATE:
DRAWN BY: WCP
DATE: 00/00/00
FILE: WLP785–FDL

WIESER CONCRETE
W3716 US HWY 10 MAIDEN ROCK, WI 54750
800–325–8456

WLP785–FDL
SEPTIC MANUAL

SHEET NO. 1 OF 1